SEPARATOR PCS-120A

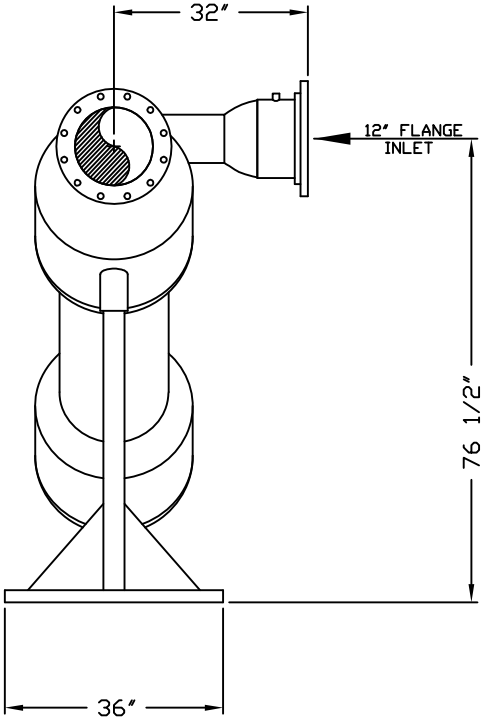

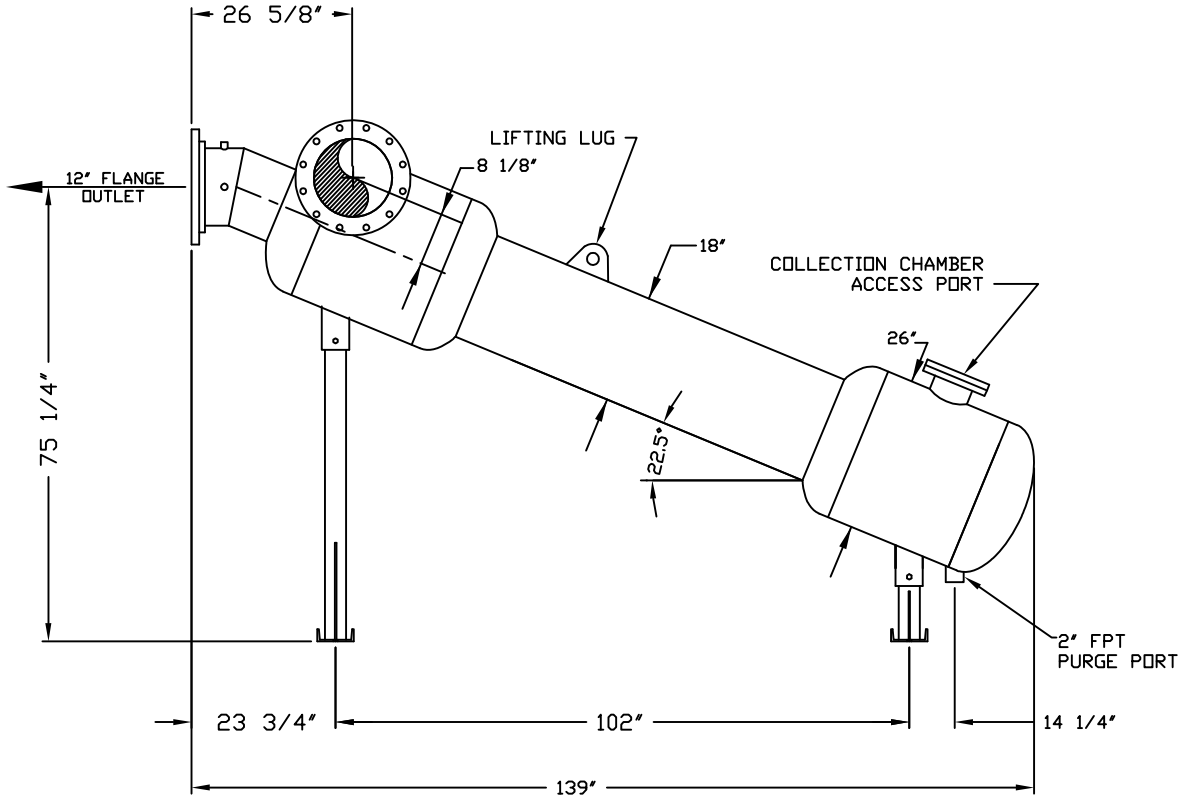

FLOW RATE: 2025-3400 GPM
MAX PRESSURE: 150 PSI MAX
MIN BACK PRESSURE: 15 PSI

THIS DRAWING, INCLUDING THE INFORMATION IT CONTAINS, IS CONFIDENTIAL, PROPRIETARY AND IS THE PROPERTY OF YARDNEY WATER MANAGEMENT, INC. IT IS SUBMITTED ONLY IN CONNECTION WITH THE TRANSACTION TO WHICH IT PERTAINS AND MUST NOT BE USED IN ANY OTHER MANNER DETRIMENTAL TO THE INTERESTS OF YARDNEY WATER MANAGEMENT. THE DRAWING IS NOT TO BE COPIED AND MUST BE RETURNED UPON REQUEST.
COPYRIGHT YARDNEY WATER MANAGEMENT SYSTEMS, 1993

SYM	REVISIONS	BY	DATE	APP
B	BACK LEG TO 2" PURGE PORT LOCATION WAS 13"	DTC	10-12	APP
A	MANUFACTURING CHANGES	DTC	1-06	APP

Yardney
WATER MANAGEMENT SYSTEMS
RIVERSIDE, CALIFORNIA

APPROVALS		DATE
DRAWN BY:	JMW	6/5/01
CHECKED BY:		
APPROVED BY:		
ARCHITECTURAL SCALE:		
USED ON:		

SEPARATOR PCS-120A
ANGLED

SIZE: –
DRAWING NO:
REV: B
SCALE:
DWG DIR: SEPARATORS\PCS\
SHEET 1 OF 1