GOLF /TURF MAXI-FLUSH 10-7A VERTICAL

NOTES:

1. DESIGN FLOW RATE: 3500 GPM (MAX.)
2. OPERATING PRESSURE: 150 PSI (MAX.)
3. CARTRIDGE:
   42" MIN. CLEARANCE REQUIRED FOR CARTRIDGE REMOVAL.

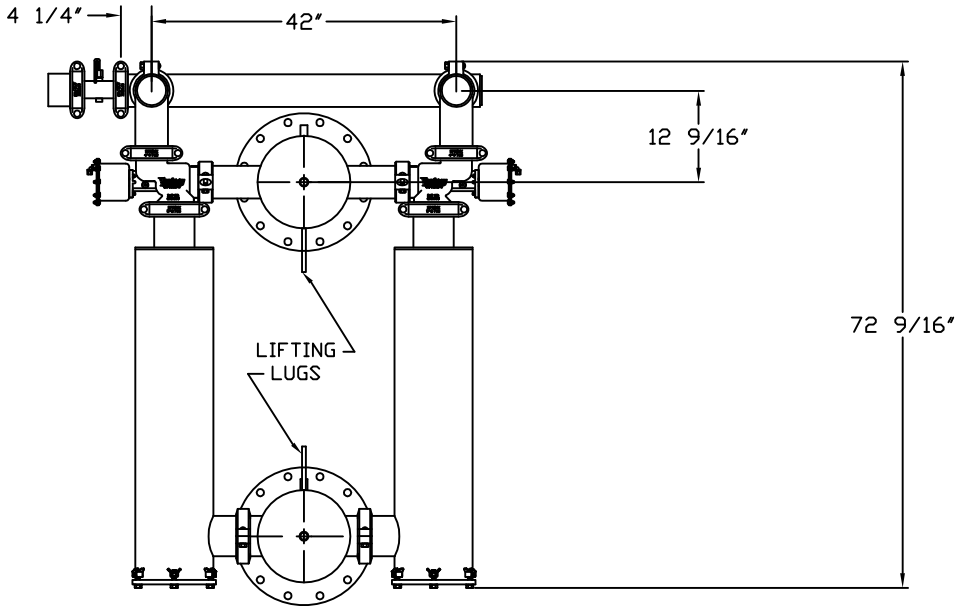

PLAN VIEW

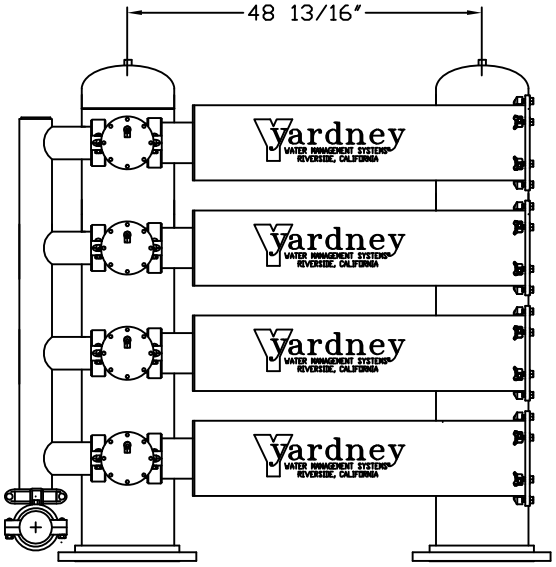

SIDE VIEW

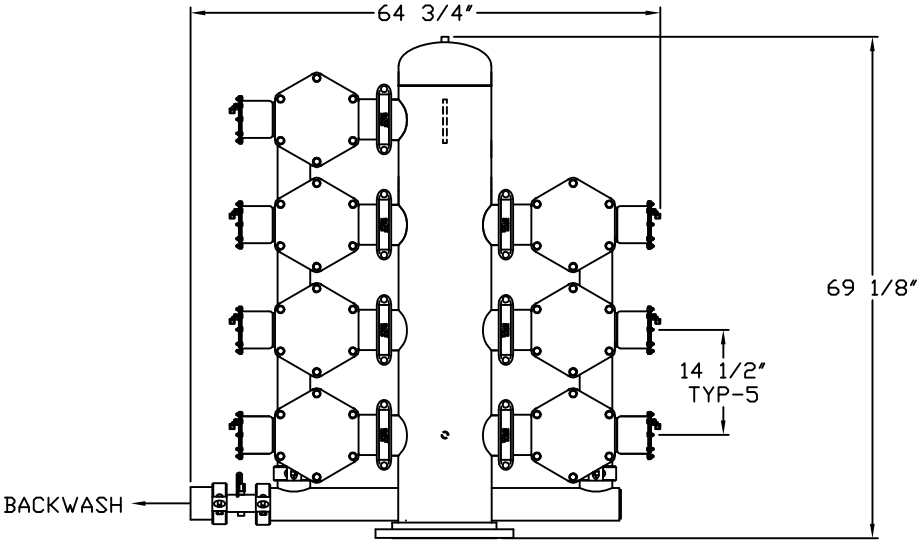

ELEVATION

THIS DRAWING, INCLUDING THE INFORMATION IT CONTAINS, IS CONFIDENTIAL, PROPRIETARY, AND IS THE PROPERTY OF YARDNEY WATER MANAGEMENT, INC. IT IS SUBMITTED ONLY IN CONNECTION WITH THE TRANSACTION TO WHICH IT PERTAINS AND MUST NOT BE USED IN ANY OTHER MANNER DETRIMENTAL TO THE INTERESTS OF YARDNEY WATER MANAGEMENT. THE DRAWING IS NOT TO BE COPIED AND MUST BE RETURNED UPON REQUEST

SYM	REVISIONS	BY	DATE	APP
C	WELD TABS ON MANWAY RINGS	DTC	10-12	APP
B	CARTRIDGE 40 TO 42 PER CART. IN SEAL	DTC	6-04	APP
A	REPLACED 3/4" NIPPLES WITH 1/2" COUPLINGS	DTC	1-04	APP

APPROVALS		DATE
DRAWN BY:	JDB	4/13/94
CHECKED BY:		
APPROVED BY:		
ARCHITECTURAL SCALE:		
USED ON:		

Yardney WATER MANAGEMENT SYSTEMS RIVERSIDE, CALIFORNIA

VERTICAL MAXI-FLUSH SCREEN FILTER MFSV 10-7A

SIZE: – | DRAWING NO: 9080210007 | REV: C

SCALE: | DWG DIR: SYSTEM\MFS\VERT | SHEET 1 OF 1